2-JAW PARALLEL GRIPPERS
INSTALLATION SIZE GPP1104

▶ PRODUCT SPECIFICATIONS

▶ Gripping force diagram

Shows the arithmetic total of the individual forces that occur on the gripper fingers, depending on the gripper finger length

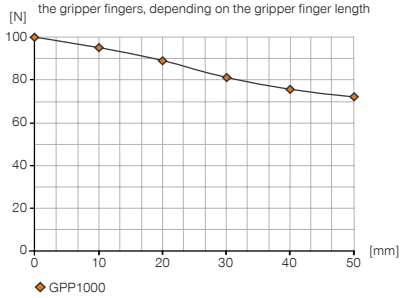

▶ Forces and moments

Displays static forces and moments that can also have an effect, besides the gripping force.

	Steel top jaws	Plastic top jaws
Mr [Nm]	4	1
Mx [Nm]	4	2
My [Nm]	2	1
Fa [N]	400	100

▶ INCLUDED IN DELIVERY

1 [piece]
Plastic top jaws and assembly material
ZUB1100

▶ RECOMMENDED ACCESSORIES

ENERGY SUPPLY

GVM5
Straight Fittings - Quick Connect Style

WVM5
Angled Fittings - Quick Connect Style

SENSORS

MFS1000SKHR
PNP Magnetic field sensor Straight Cable 0,3 m - Connector M8

SENSORS

MFS1000SKHR-NPN
NPN Magnetic field sensor Straight Cable 0,3 m - Connector M8

CONNECTIONS / OTHER

AP1100
MCS Adapter plate

▶ RECOMMENDED ACCESSORY MCS ADAPTER PLATE

GV1-4X6
Straight Fittings - Quick Connect Style

WV1-4X6
Angled Fittings - Quick Connect Style

	▶ Technical data
Order no.	**GPP1104CO-00-A**
Stroke per jaw [mm]	4
Grip force in grip direction min. [N]	100
Travel time in gripping direction [ms]	20
Reset time using spring [ms]	30
Dead weight of mounted gripper finger max. [kg]	0.1
Repetition accuracy +/- [mm]	0.05
Operating pressure [bar]	2 ... 6
Nominal operating pressure [bar]	6
Operating temperature [°C]	+5 ... +60
Air volume per cycle [cm³]	1.4
Protection to IEC 60529	IP30
Weight [kg]	0.17

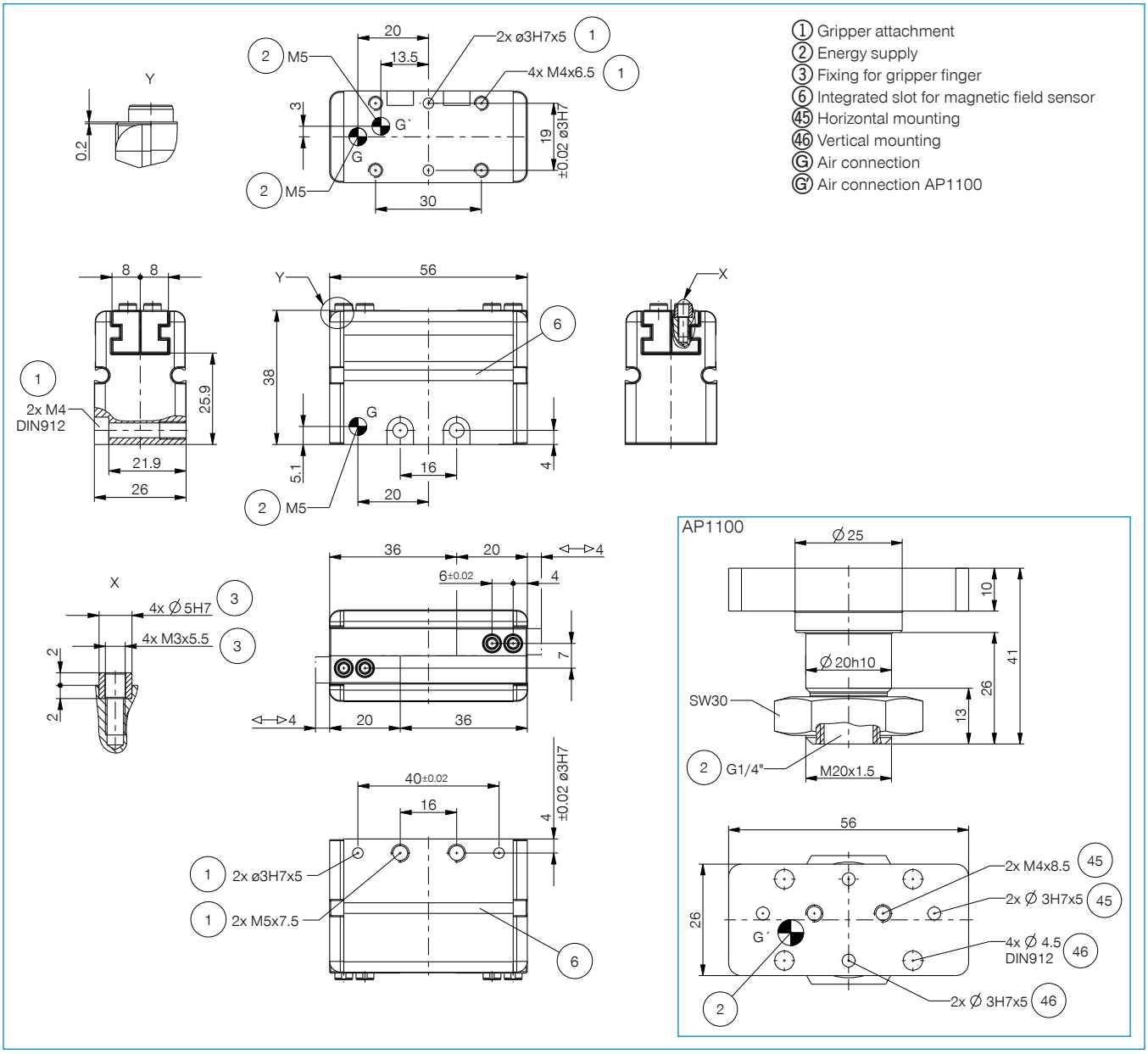

2-JAW PARALLEL GRIPPERS
SERIES GPP1000

▶ PRODUCT ADVANTAGES

“Cost-effective”

- Parallel gripper with an unbeatable price/performance ratio
- Gripper jaw set and fixation material included
- Can be configured for spring opening or spring closing
- One installation size, three strokes: 4, 8 and 16 mm per gripper jaw
- Gripping force of 100 N
- Service life of up to 2 million cycles

▶ SERIES CHARACTERISTICS

Installation size	Version
GPP11XX	CO
2 million maintenance-free cycles (max.)	●
Magnetic field sensor	●
IP30	●

▶ BENEFITS IN DETAIL

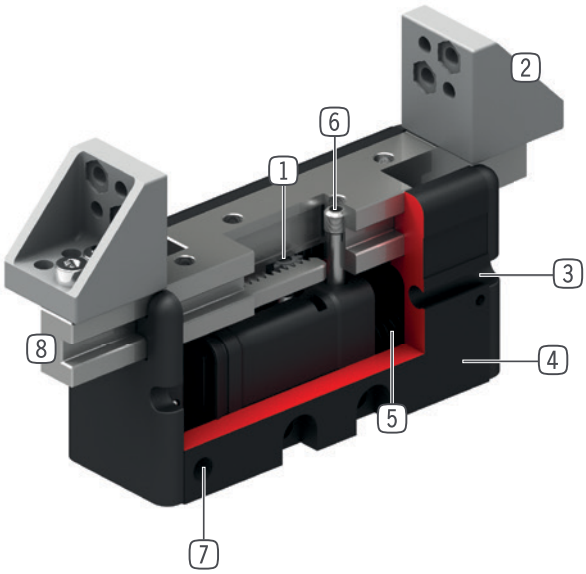

1 **Synchronization**
- via rack and pinion

2 **Intermediate jaws**
- incl. mounting material
- included in scope of delivery

3 **Sensing**
- mounting and positioning of magnetic field sensors

4 **Lightweight housing**
- Hard-coated aluminum alloy

5 **Single-acting pneumatic cylinder**
- Spring return

6 **Jaw slave screw**
- for changing the gripper's direction of force

7 **Energy supply**
- possible from several sides

8 **Gripper jaw**
- for connecting the intermediate jaw or an individual gripper finger via centering sleeves

▶ TECHNICAL DATA

Installation size	Stroke per jaw [mm]	Gripping force [N]	Weight [kg]	IP class
GPP1100	4 - 16	100	0,16 - 0,20	IP30

▶ FURTHER INFORMATION IS AVAILABLE ONLINE

All information just a click away at: www.zimmer-group.com. Find data, illustrations, 3D models and operating instructions for your installation size using the order number for your desired product. Quick, clear and always up-to-date.