CLAMPING ELEMENT | PNEUMATIC
UBPS5501CS1L

▶ PRODUCT ADVANTAGES

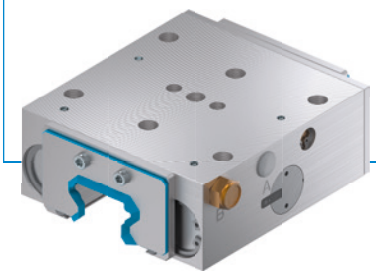

- **broad range of products**
  For all common profile rail guides
- **Energize to open (NC)**
  through spring-loaded energy storage
- **high durability**
  5 million static clamping cycles
- **Higher holding force**
  Via activation with PLUS air
- **Safety element**
  Safe braking in case of energy failure

▶ TECHNICAL DETAILS

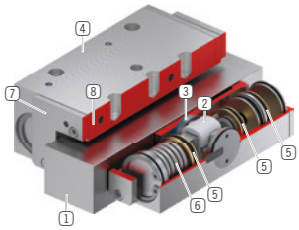

1. **Profile rail guide**
   - Available for all common profile rail guides
2. **Wedge-type gear**
   - Power transmission between the pistons and clamping jaws and brake shoes
3. **Clamping jaws and brake shoes**
   - Pressed at the free surfaces of the profile rail guide
4. **Housing**
5. **Pneumatic piston**
   - The piston moves the wedge-type gear longitudinally
6. **Spring-loaded energy storage**
   - For non-pressurized closing of the clamping unit
7. **Scraper**
   - Can also be ordered as an option
8. **Integrated valve (optional)**
   - Up to 60% faster closing time
   - regardless of the cable length

▶ INFORMATION ON THE PRODUCTS

APPLICATION SCE-NARIOS

- **Emergency OFF function**
- **Z-axes positioning in neutral position**
- **Machine table clamping of work centre**

FURTHER INFORMATION

- **Spacer plate**
  In addition, a spacer plate might have to be ordered as height compensation, depending on the height of the rail carriage (dimension D).
- **Special variants on request, e.g.**
  With proximity switch monitoring
  With low opening pressure (3.0 bar)
  With additional air connection (from above, from the front)
  Integrated valve for reduced closing time

▶ TECHNICAL DRAWINGS

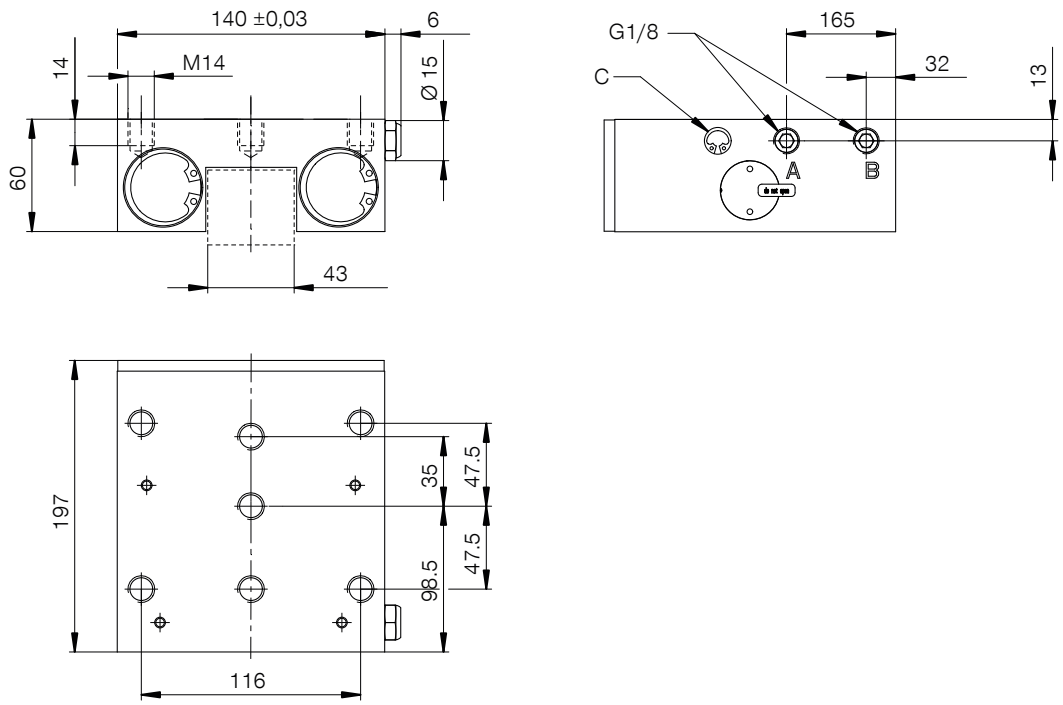

Ⓐ Connection opening (both sides possible, only one connection necessary)

Ⓑ Vent filter (one-sided) Connection can be used as PLUS-connection (both sides possible, only one connection necessary)

Ⓒ Quick exhaust valve (both sides)

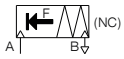

▶ TECHNICAL DATA

Order no.	UBPS5501CS1L
Operation	pneumatic
Holding force [N]	5200
Theoretical holding force (μ=0,1) [N]	6,500
PLUS connection possible	Yes
Holding force PLUS connection [N]	7600
Operating pressure [bar]	5.5 ... 6.5
Nominal operating pressure [bar]	6
B10d value	5,000,000
Positioning accuracy +/- [mm]	0,02
Opening time [s]	0.4
Closing time [s]	0.03
Operating temperature [°C]	-10 ... +70
Weight [kg]	8.4
Function	Clamping and braking
Condition	NC (Normally Closed) closed without pressure
Installation direction	from the front
Certifications	CE / UKCA / LABS / REACH / RoHS

Schematic drawing. General tolerances in accordance with DIN ISO 2768 T1-f/T2-H. Edges in accordance with ISO 13715. Stop face can be used on both sides. Center fixing holes must be used. Element offers no guiding properties. Guidance must be external. The holding force is the maximum force that can be applied in the axial direction. Each clamping and braking element is tested in a 100% inspection before delivery for the specified holding forces on a hardened steel rail with a lightly oiled lubricating layer (ISO-VG 68). The use of other lubricants or rail coatings can influence the coefficient of friction. The operating instructions must be observed before commissioning. We reserve the right to make technical changes in the course of further development. The latest and further data can be found online and in the operating instructions at www.zimmer-group.com.