ENERGY ELEMENT
WER04FH1D

▶ Technical Data

Order no.	WER04FH1D
compatible with	Fixed part
Fixing thread	G1/4"
Number of fluid couplings	1
Nominal diameter	5
Operating pressure max. [bar]*	350
Operating pressure max. [bar]**	350
Weight [kg]	0.20

*At pressures of approximately 50 bar and higher, there must be external locking of the elements.

**Observe coupling force

▶ Coupling force per fluid coupling

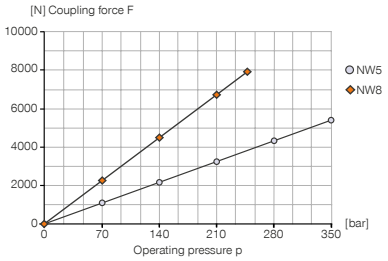
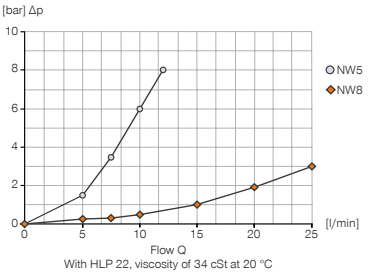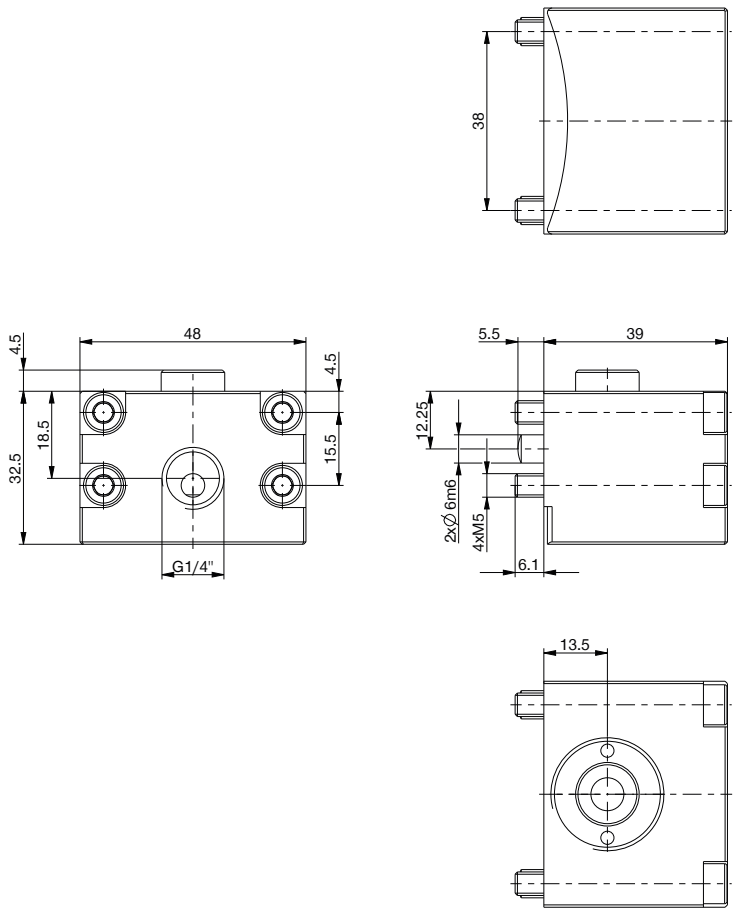
▶ Flow