INSTALLATION AND OPERATING INSTRUCTIONS

2-jaw parallel gripper
GPP5000
GPP5000AL
3-jaw concentric gripper
GPD5000
GPD5000AL

DDOC00196

THE KNOW-HOW FACTORY

Content

1 Introduction ... 3
- 1.1 Supporting documents ... 3
- 1.2 Notices and graphics in the instructions ... 3

2 Safety notices ... 4

3 Proper use ... 5

4 Personnel qualification ... 5
- 4.1 Electricians ... 5
- 4.2 Specialists ... 5
- 4.3 Instructed personnel ... 5
- 4.4 Service personnel ... 5
- 4.5 Additional qualifications ... 5

5 Product description ... 6
- 5.1 Type plate ... 6

6 Functional description ... 6

7 Technical data ... 6

8 Accessories/scope of delivery ... 7

9 Transportation/storage/preservation ... 7

10 Installation ... 8
- 10.1 Installing GPP5000, GPP5000AL ... 9
- 10.2 Installing GPD5000, GPD5000AL ... 9
- 10.3 Installing the energy supply ... 10
- 10.4 Installing the sensors ... 11
  - 10.4.1 Adjusting the magnetic field sensors ... 11
  - 10.4.2 Setting the inductive sensors ... 11
- 10.5 Installing the gripper fingers ... 12
- 10.6 Installing the support structure ... 13
- 10.7 Installing accessories ... 13

11 Maintenance ... 14

12 Decommissioning/disposal ... 15

13 Declaration of Incorporation (Machinery Directive) ... 16

14 Declaration of Incorporation ... 17

DDOC00196 / o EN / 2026-06-12

1 Introduction

1.1 Supporting documents

NOTICE

Read through the instructions before installing or working with the product.

The instructions contain important notes for your personal safety. They must be read and understood by all persons who work with or handle the product during any phase of the product lifetime.

The documents listed below are available for download on our website www.zimmer-group.com.

- Instructions
- Catalogs, drawings, CAD data, performance data
- Information on accessories
- Technical data sheets
- General Terms and Conditions, including warranty information.

⇨ Only those documents currently available on the website are valid.

In these instructions, "product" refers to the product designation on the title page!

1.2 Notices and graphics in the instructions

DANGER

This notice warns of an imminent danger to the life and health of people. Ignoring these notices can lead to serious injury or even death.

► You absolutely must comply with the described measures for avoiding these dangers!

⇨ The warning symbols are assigned according to the type of danger.

WARNING

This notice warns of a situation that is potentially hazardous to personal health. Ignoring these notices can cause serious injury or damage to health.

► You absolutely must comply with the described measures for avoiding these dangers!

⇨ The warning symbols are assigned according to the type of danger.

CAUTION

This notice warns of a situation that is potentially hazardous to persons. Ignoring these notices can cause minor, reversible injuries.

► You absolutely must comply with the described measures for avoiding these dangers!

⇨ The warning symbols are assigned according to the type of danger.

NOTICE

This notice warns of possible material and environmental damage. Ignoring these notices can result in damage to the product or the environment.

► You absolutely must comply with the described measures for avoiding these dangers!

⇨ The warning symbols are assigned according to the type of danger.

INFORMATION

This category contains useful tips for handling the product efficiently. Failure to observe these tips will not result in damage to the product. This information does not include any information relevant to health or workplace safety.

2 Safety notices

CAUTION

Risk of injury and material damage in case of non-compliance

The product is state-of-the-art.

The following are examples of situations in which the product may cause a hazard:

- The product is not properly installed, used or maintained.
- The product is not used for its designated purpose.
- The locally applicable regulations, laws, directives or guidelines are not observed.

▶ The product may only be used in accordance with these instructions and the product's technical data. Any changes or additions to the intended use of the product, as well as modifications to the product, such as those in the following examples, require the written permission of the manufacturer:

- Use of the product under extreme conditions, such as aggressive fluids or abrasive dusts
- Additional drilled holes or threads

⇨ Zimmer Group GmbH shall accept no liability for any damage caused by improper use. The operator bears sole responsibility.

▶ Make sure that the power supply is disconnected before you mount, adjust, modify, maintain or repair the product.

▶ Whenever work is carried out on the product, make sure that the product cannot be actuated by mistake.

▶ Perform maintenance tasks, renovation work or attachment work outside of the machine's danger zone when possible.

▶ Do not reach into the operational range of the product.

▶ Note that, due to the spring tension, you should exercise increased caution when uninstalling products with integrated springs.

▶ Observe the specified maintenance intervals and specifications regarding the quality of the operating material.

▶ When using the product under extreme conditions, adjust the maintenance interval according to the degree of contamination.

▶ Check the completeness and tightening torques of all mounting screws.

3 Proper use

NOTICE

Material damage and malfunction in case of non-compliance

The product is only to be used in its original state with its original accessories, with no unauthorized changes and within the stipulated parameter limits and operating conditions.

Any other or secondary use is deemed improper.

- ▶ Operate the product only in compliance with the associated instructions.
- ▶ Operate the product only when it is in a technical condition that corresponds to the guaranteed parameters and operating conditions.
- ⇨ Zimmer Group GmbH shall accept no liability for any damage caused by improper use. The operator bears sole responsibility.

- The product is to be used as intended in enclosed rooms for temporary gripping, handling and holding.
- The product is intended for industrial use.
- The product is not suited for use in a potentially explosive atmosphere.
- Direct contact with perishable goods/food is not permitted.
- The product is not suitable for clamping workpieces during a machining process.
- The product is designed exclusively for pneumatic operation.

4 Personnel qualification

WARNING

Inadequate qualification can cause injury and material damage

If inadequately qualified personnel perform work on the product, this can cause serious injuries and significant material damage.

- ▶ All work on the product must be performed by qualified personnel.
- ▶ Before working with the product, read the document in its entirety and make sure that you have understood everything.
- ▶ Observe country-specific accident prevention regulations and the general safety notices.

The following qualifications are a prerequisite for performing various work on the product.

4.1 Electricians

Electricians are able to perform work on electrical systems, can recognize and avoid possible dangers and know the relevant standards and provisions due to their technical training, knowledge and experience.

4.2 Specialists

Specialists are able to perform the assigned work, can recognize and avoid possible dangers and know the relevant standards and provisions due to their technical training, knowledge and experience.

4.3 Instructed personnel

Instructed personnel have been trained by the operating company on the tasks and possible dangers of improper behavior.

4.4 Service personnel

Service personnel are able to perform the assigned work and can recognize and avoid possible dangers due to their technical training, knowledge and experience.

4.5 Additional qualifications

Persons who work with the product must be familiar with the valid safety regulations and laws as well as the standards, guidelines and laws listed in this document.

Personnel who work with the product must have facility-issued authorization to commission, program, configure, operate, maintain and also decommission this product.

5 Product description

5.1 Type plate

A type plate is attached to the product.

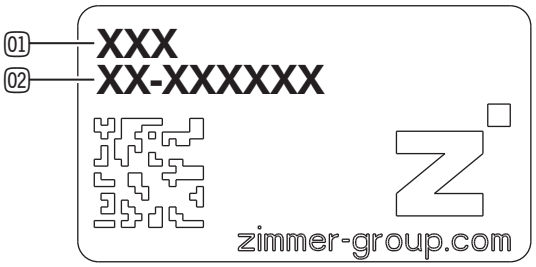

01 Article number

02 Confirmation number

6 Functional description

The gripper jaws of the 2-jaw parallel gripper are arranged parallel to each other on two opposing guide rails and can be moved relative to each other.

The gripper jaws of the 3-jaw concentric gripper are arranged on three guide rails offset to each other at a 120° angle.

The product has a double-acting pneumatic rotor cylinder.

Alternating ventilation sets the piston in motion.

The force of the piston is transferred to a wedge hook mechanism that sets the jaws in synchronized motion.

Certain product variants feature a spring in the cylinder chamber that acts as a grip force safety device.

GPP5000, GPP5000AL

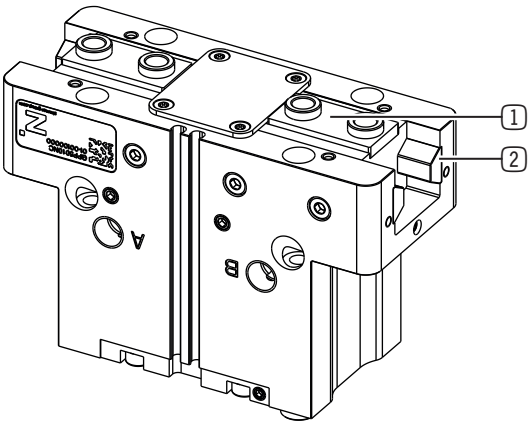

GPD5000, GPD5000AL

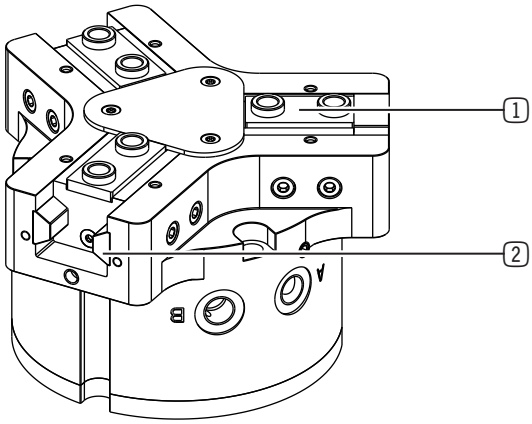

1 Gripper jaw

2 Guide rail

7 Technical data

INFORMATION

▶ You can find the information in the technical data sheet on our website.

This data varies within the series, depending on the specific design.

8 Accessories/scope of delivery

INFORMATION

If any accessories not sold or authorized by Zimmer Group GmbH are used, the function of the product cannot be guaranteed. Zimmer Group GmbH accessories are specifically tailored to the individual products.

- For optional accessories and those included in the scope of delivery, refer to our website.

9 Transportation/storage/preservation

- Transport and storage of the product must be done only with the original packaging.
- If the product has already been installed on the superordinate machine unit, care must be taken during transport to ensure that no unexpected movements can occur.
  - Before commissioning the product and after transport, check all power and communication connections as well as all mechanical connections.
- If the product is stored for an extended period, the following points are to be observed:
  - Keep the storage location as dust-free and dry as possible.
  - Avoid temperature fluctuations.
  - Avoid wind/drafts/water condensation formation.
  - Pack the product and do not expose it to direct sunlight during storage.
- Clean all components. There must be no soiling left on the components.
- Visually inspect all components.
- Remove all foreign substances.
- Properly remove potential corrosion spots.
- Close off unused connections using pressure-resistant closures.

10 Installation

DANGER

Risk of fatal injury due to unsuitable lifting equipment

There is a very high risk of injury during overhead assembly or removal of products if the dead weight exceeds 3 kg.

- ► Use suitable lifting equipment or racks.

WARNING

Risk of injury from crushing

If the cover of the wedge hook transmission is removed, there is a risk of crushing between the gripper jaws. Crushing injuries can result from the gripping process.

- ► Ensure that no persons are within the movement range of the product.
- ► Do installation, maintenance and servicing work in jog mode only.

WARNING

Risk of injury due to uncontrolled movements

Risk of injury in case of unexpected movement of the machine or system into which the product is to be installed.

- ► Switch off the energy supply of the machine before any work.
- ► Secure the power supply against being switched on unintentionally.
- ► Check the machine for any residual energy that may be present.
- ► For spring-assisted products, wait until the gripper jaws reach the end position with the system depressurized.

CAUTION

Risk of injury due to uncontrolled movements

Risk of injury in the event of uncontrolled movement of the product when the power supply is connected.

- ► Switch off the power supply to the machine before carrying out any work.
- ► Secure the power supply against being switched on unintentionally.
- ► Check the machine for any residual energy that may be present.

Assembly requirements		
Permissible flatness tolerance [mm]	Mounting surface length [mm] ≤ 100	0.02
	Mounting surface length [mm] > 100	0.05
Strength class of the mounting screws	8.8	

INFORMATION

Further installation information:

- The mounting screws are not included in the scope of delivery.

- ► Install the product on an appropriate mounting surface in accordance with the flatness specifications.
- ► Make sure that the mounting piece is sufficiently rigid.
- ► Ensure the cleanliness of the connection surfaces.
- ► Please note the permitted tightening torques of the mounting screws at www.zimmer-group.com/en/td.

10.1 Installing GPP5000, GPP5000AL

The product can be installed from multiple sides.

- ▶ Insert the centering sleeves into the provided fits on the product.
- ▶ Position the product on the mounting piece using centering sleeves.
- ▶ Mount the product on the mounting piece using the appropriate mounting screws.

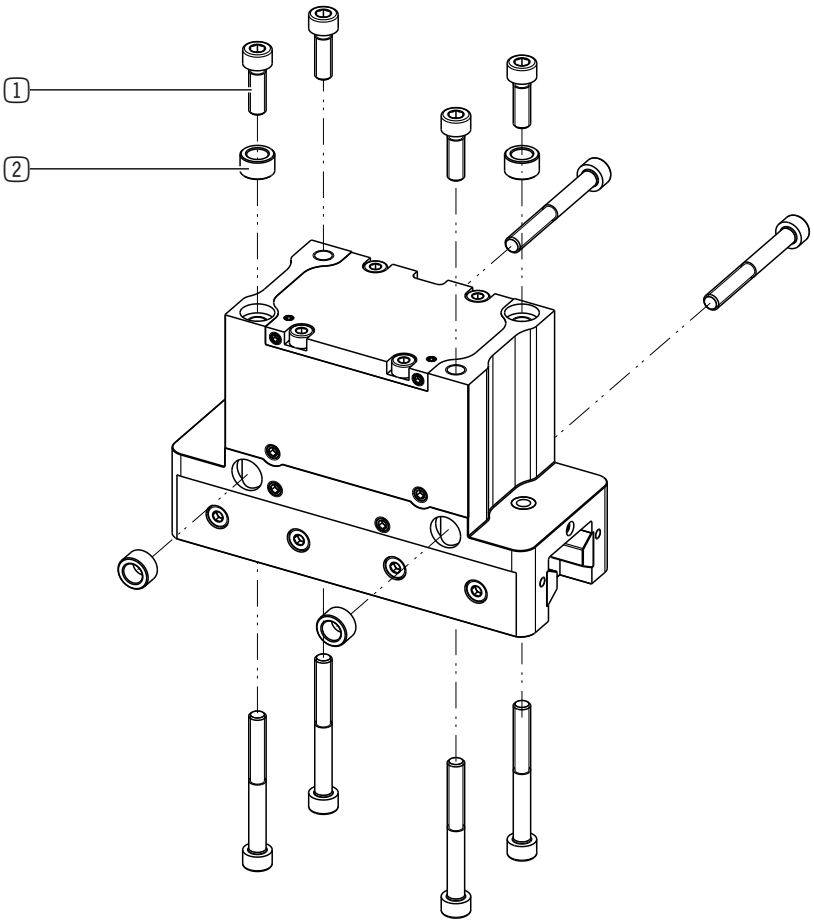

1 Mounting screw

2 Centering Disc

10.2 Installing GPD5000, GPD5000AL

The product can be installed from multiple sides.

- ▶ Insert the straight pins into the designated fits on the product.
- ▶ Position the product on the mounting piece with the straight pins.
- ▶ Mount the product on the mounting piece using the appropriate mounting screws.

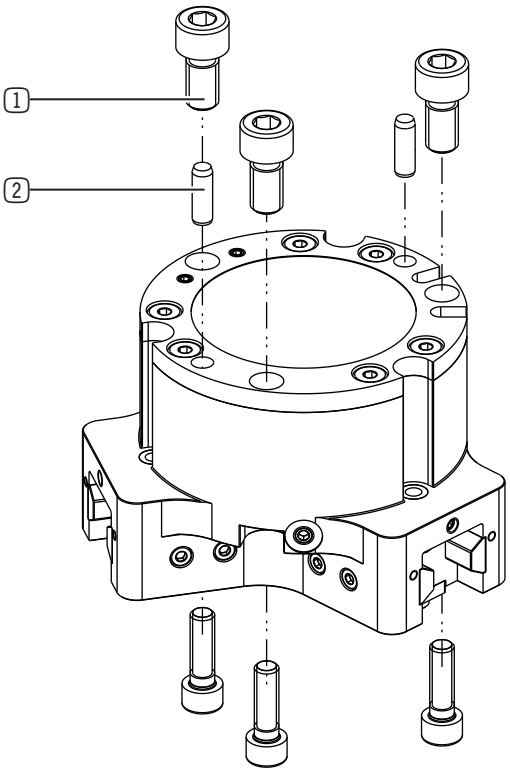

1 Mounting screw

2 Straight pins

10.3 Installing the energy supply

NOTICE

Non-compliance may result in material damage.

- ▶ You can find the information in the technical data sheet on our website.
- ▶ Close off unused connections using pressure-resistant closures.
- ▶ The authorized connections that are available can be found in the accessories list on our website.
- ▶ Use compressed air in accordance with DIN ISO 8573-1 [7:4:4].

NOTICE

Non-compliance may result in material damage.

If the pressure at the sealing air connection is too high, the lubrication of the spindle bearings may be impaired.

- ▶ Apply a maximum pressure of 0.5 bar to the air purge connection.

▶ Mount the screw fittings in the provided connections.

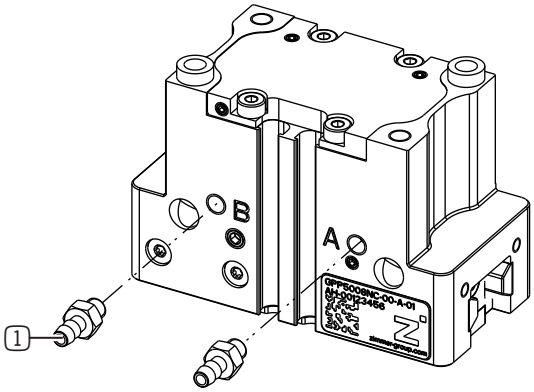

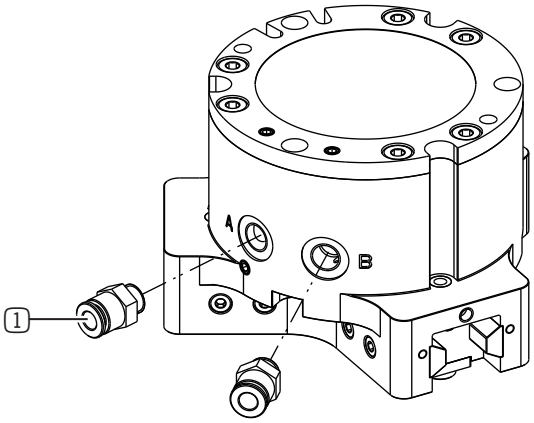

1 Connector

10.4 Installing the sensors

NOTICE

Non-compliance may result in material damage.

Cables must be installed with sufficient length.

- ▶ Ensure that the cables cannot be pinched, crushed, or torn off within the movement and swivel ranges.

10.4.1 Adjusting the magnetic field sensors

NOTICE

Material damage caused by magnetic influences

- ▶ Note that switching point shifts may occur if the sensors are exposed to an additional, external magnetic field.
- ▶ Do not attach magnets or components with ferromagnetic properties in the vicinity of components that may be affected by them.

INFORMATION

The sensors are available as accessories.

- ▶ More information can be found in the instructions of the sensor.

10.4.2 Setting the inductive sensors

INFORMATION

The inductive sensors can be used in ascending order starting from installation sizes GPP5006 and GPD5006.

- ▶ Please note that inductive sensors cannot be used for the GPP5000AL and GPD5000AL series.

The sensors can detect any desired position of the gripper jaws.

- ▶ Insert the sensor into the terminal block provided for this purpose.
- ▶ Push the sensor as far as it will go (to the end stop).
- ▶ Clamp the sensor using the clamping screw.
- ▶ Connect the sensor to the operating voltage.
- ▶ Move the gripper jaws into the desired position.
- ▶ Adjust the switch cam using the set screw until the function display on the sensor illuminates.

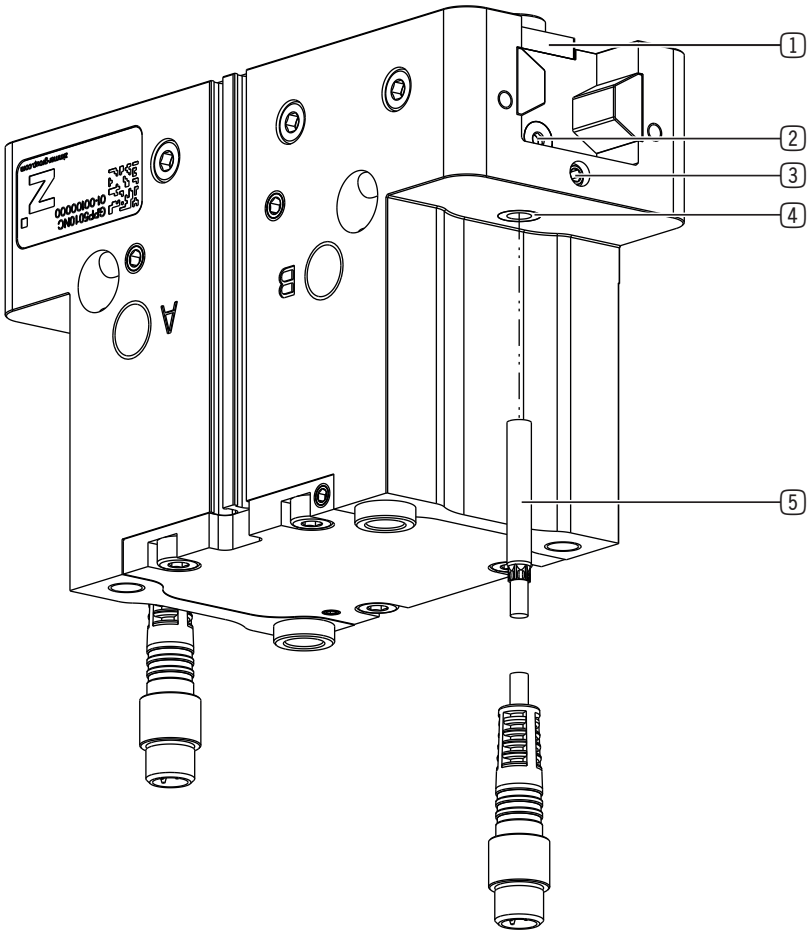

1 Gripper jaw

2 Adjusting screw

3 Clamping screw

4 Mounting block

5 Inductive sensor

10.5 Installing the gripper fingers

NOTICE

Non-compliance may result in material damage.

- ▶ Before installing the gripper fingers, check whether their length is suitable for the selected variant.
- ▶ You can find information on our website.
- ▶ Please contact Customer Service if you have any questions.

Assembly requirements		
Strength class of the mounting screws	GPP5000, GPP5000AL	8.8
	GPD5000, GPD5000AL	12.9

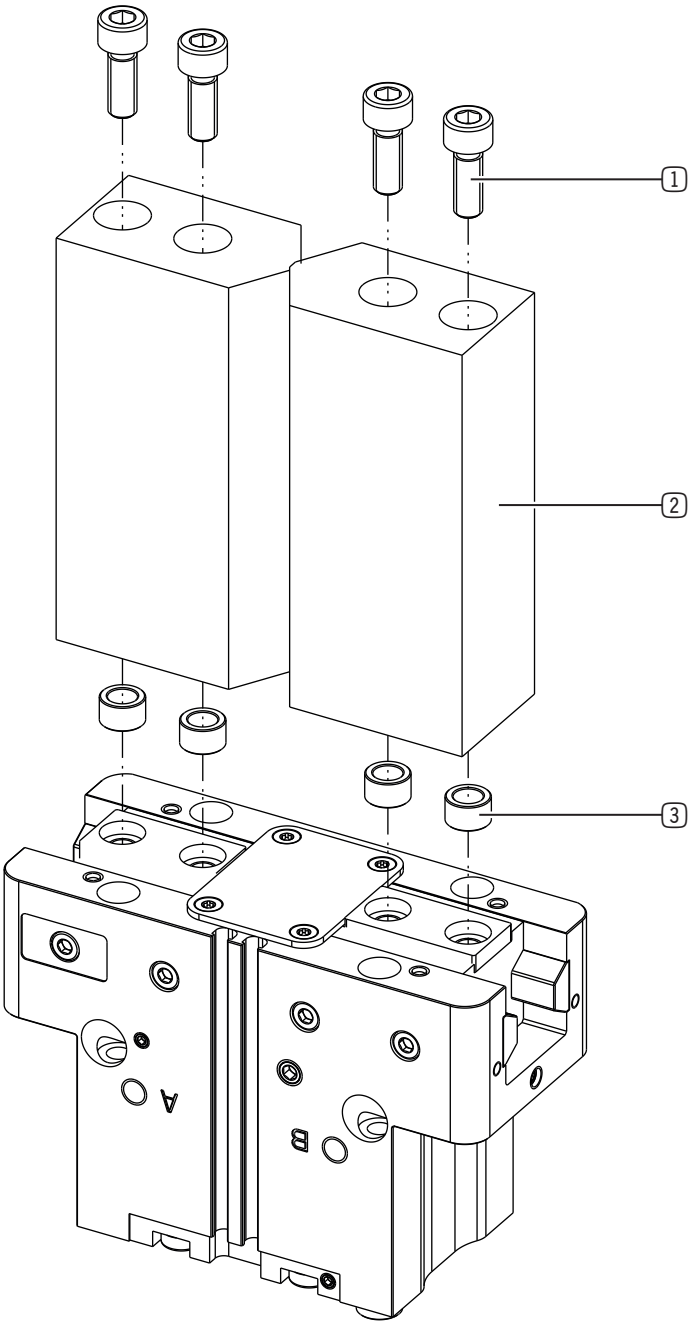

1 Mounting screw

2 Gripper finger

3 Centering Disc

10.6 Installing the support structure

CAUTION

Risk of injury from collision

► Make sure that when the product is moving, the support structure does not collide with other parts of the machine in which the product is installed.

NOTICE

Non-compliance may result in material damage.

The customer-specific support structure must be designed such that it does not impede the movement of the gripper jaws.

Dimension A may not be exceeded by the support structure.

Dimension B may be exceeded by the support structure.

► For the dimensions required for the customer-specific support structure, refer to the technical data sheet found on our website.

INFORMATION

Please note that no support structure can be installed for the GPD5000 and GPD5000AL series if a pressure piece is installed on the product.

For the use of customer-specific support structures, the cover plate can be removed. For installing a support structure, there are additional fits under the cover plate.

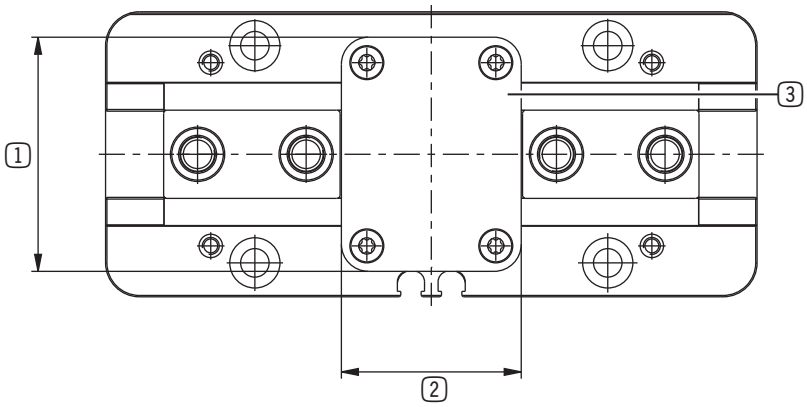

1 Dimension B

2 Dimension A

3 Cover plate

10.7 Installing accessories

NOTICE

Non-compliance may result in material damage.

► Before installing an accessory, make sure it is suitable for use with the selected variant.

► You can find information on our website.

► Please contact Customer Service if you have any questions.

11 Maintenance

WARNING

Risk of injury from crushing

If the cover of the wedge hook transmission is removed, there is a risk of crushing between the gripper jaws. Crushing injuries can result from the gripping process.

- ► Ensure that no persons are within the movement range of the product.
- ► Do installation, maintenance and servicing work in jog mode only.

WARNING

Risk of injury due to objects being ejected

The product has integrated gripping force retention. This device is a spring that acts as an energy accumulator. When uninstalling the piston cover, it can be ejected due to the pretensioned spring.

- ► When disassembling the product, use a device that prevents the piston cover from being ejected.
- ► Have maintenance work be performed only by Customer Service.

NOTICE

Material damage resulting from blowing out with compressed air

Blowing out the product with compressed air can cause malfunctions.

- ► Never purge the product with compressed air.

NOTICE

Material damage caused by unsuitable cleaning materials

Seals, insulation, coatings and other surfaces may be damaged by solvent-based cleaning agents.

- ► Make sure that no liquids penetrate the product.
- ► Use chemically and biologically neutral cleaning agents.
- ► Use cleaning agents that are categorized as being nonhazardous to health.
- ► Use soft, lint-free cloths for cleaning the surface.

The use of the following cleaning agents is strictly prohibited:

- Acetone
- Cleaning solvent
- Nitrocellulose thinner/turpentine oil (solvents)

NOTICE

Contamination of the environment due to escaping lubricants

Lubricants can escape through moving machine parts. This can lead to contamination of the machine, the workpiece and the environment.

- ► Remove leaking lubricant immediately and thoroughly.

Maintenance-free operation of the of the GPP5000 and GPD5000 series is guaranteed for up to **30 million cycles**.

Maintenance-free operation of the of the GPP5000AL and GPD5000AL series is guaranteed for up to **15 million cycles**.

► Note that the product could become damaged under the following circumstances:

- Operation with impermissible compressed air
- Dirty environment
- Improper use and use that does not comply with the performance data
- Permissible temperature range not observed

► Even though the product is maintenance-free as mentioned above, perform a regular visual inspection to check for any damage or contamination.

► Have maintenance work that requires disassembly of the product performed by customer service only.

⇨ Dismantling and reassembling the product without authorization may result in complications, as special installation equipment is required in some cases. Zimmer Group GmbH accepts no liability for any resulting malfunctions or damage.

12 Decommissioning/disposal

INFORMATION

When the product reaches the end of its operational phase, it can be disposed of.

► Disconnect the product completely from the power supply.

► Comply with the locally applicable environmental and disposal regulations.

13 Declaration of Incorporation (Machinery Directive)

In terms of the EU Machinery Directive 2006/42/EC (Annex II 1 B)

Name and address of the manufacturer:

Zimmer Group GmbH

Am Glockenloch 2
77866 Rheinau, Germany
+49 7844 9138 0
info@zimmer-group.com
www.zimmer-group.com

We hereby declare that the incomplete machine described below

Product designation:	2-jaw parallel gripper, 3-jaw concentric gripper
Type designation:	GPP5000, GPP5000AL, GPD5000, GPD5000AL

conforms to the requirements of the Machinery Directive, 2006/42/EC, Article 2g, Annex VII, b – Annex II, b, in its design and the version we put on the market.

We hereby confirm that all the relevant basic health and safety requirements for the product have been observed and implemented.

A full list of applied standards can be obtained from the manufacturer.

We also declare that the specific technical documents were produced in accordance with Annex VII Part B of this Directive. We undertake to provide the market supervisory bodies with electronic versions of special documents for the incomplete machine through our documentation department, should they have reason to request them.

The incomplete machine may only be commissioned if it has been ascertained, if applicable, that the machine or system in which the incomplete machine is to be installed satisfies the requirements of Directive 2006/42/EC on Machinery and an EC Declaration of Conformity has been drawn up in accordance with Annex II 1 A.

Kurt Ross	Rheinau, Germany, 2020-10-08	
Authorized representative for compiling the relevant technical documents	(Place and date of issuance)	Martin Zimmer (Legally binding signature) Managing Partner

14 Declaration of Incorporation

In terms of the EU Machinery Regulation 2023/1230, Annex V, Part B

Name and address of the manufacturer:

Zimmer Group GmbH

Am Glockenloch 2
77866 Rheinau, Germany
+49 7844 9138 0
info@zimmer-group.com
www.zimmer-group.com

We hereby declare that the incomplete machine described below

Product designation:	2-jaw parallel gripper, 3-jaw concentric gripper
Type designation:	GPP5000, GPP5000AL, GPD5000, GPD5000AL

in their design and in the version we have placed on the market comply with the requirements of Regulation 2023/1230, Article 3.10, Annex III, Annex IV, Part B and Annex V, Part B.

A complete list of the standards applied and the essential health and safety requirements is available from the manufacturer.

The incomplete machine must not be commissioned until it has been determined that - where applicable - the machine into which the incomplete machine is to be incorporated complies with the provisions of EU Machinery Regulation 2023/1230 and the EC Declaration of Conformity has been issued in accordance with Annex V, Part A.

Kurt Ross	Rheinau, Germany, 2027-01-20	
Authorized representative for compiling the relevant technical documents	(Place and date of issuance)	Martin Zimmer (Legally binding signature) Managing Partner