CLAMPING ELEMENTS | MANUAL

HK2505G + PHK25-4

▶ PRODUCT ADVANTAGES

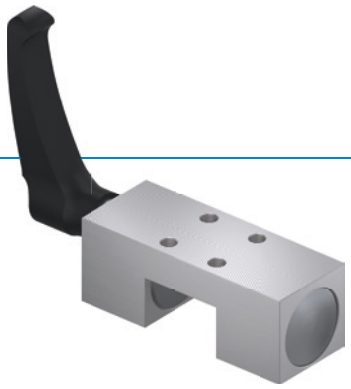

- **broad range of products**

  For all common profile rail guides
- **Tool-free opening and closing (bi-stable)**

  By turning the clamping lever
- **Maintenance free**

  50,000 static clamping cycles

▶ TECHNICAL DETAILS

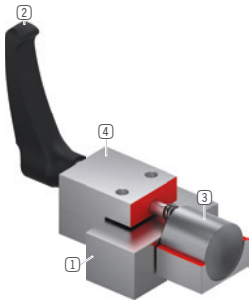

1 **Profile rail guide**
- Available for all common profile rail guides

2 **Clamping lever made from plastic**
- Freely adjustable (release by lifting)

3 **Clamping jaw**
- The floating bearingsguarantee symmetrical application of force

4 **Housing**

▶ INFORMATION ON THE PRODUCTS

APPLICATION SCE-NARIOS

- **Table traverses and carriages**
- **Adjustment of width and stops**
- **Positioning of optic instruments and measuring tables**

FURTHER INFORMATION

- **Spacer plate**

  In addition, a spacer plate might have to be ordered as height compensation, depending on the height of the rail carriage (dimension D).
- **Special variants on request, e.g.**

  Operation using DIN 912 Allen screws

  Extended clamping lever

  made of stainless steel

Track manufacturer	Rail type	Rail size	Carriage type
Bosch Rexroth	**R205.. / KSE (ball)**	**25**	**R205F (SLH)**

▶ TECHNICAL DRAWINGS

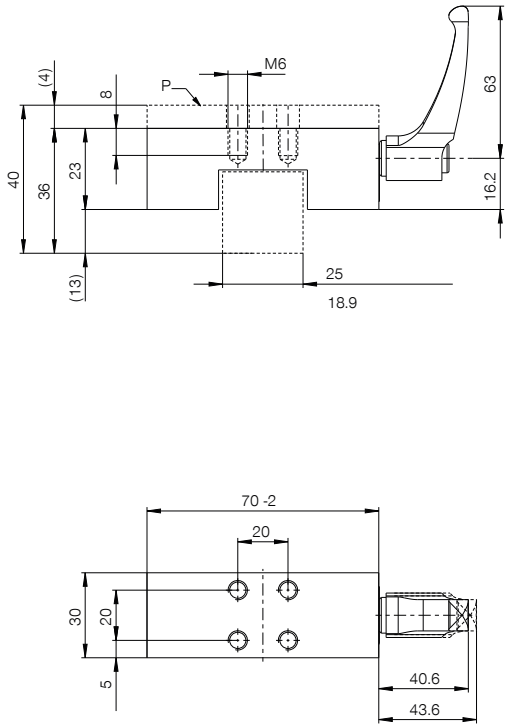

▶ TECHNICAL DATA

Order No.	HK2505G + PHK25-4
Operation	manual
Holding force	1000 [N]
Theoretical holding force (μ=0,1)	1,250 [N]
B10d value	50,000
Positioning accuracy +/-	0,02 [mm]
Operating temperature	-10 ... +70 [°C]
Weight	0.32 [kg]
Function	Clamping
Condition	N (bistable) remains in current position
Installation direction	from above
Masking tape can be used	without masking tape
Tightening torque	7.00 [Nm]

Schematic drawing. General tolerances according to DIN ISO 2768 T1-f/T2-H. Edges according to ISO 13715. Element has no guiding properties. Guidance must be external. The holding force is the maximum force that can be applied in the axial direction. Each clamping and braking element is tested in a 100% inspection before delivery for the specified holding forces on a hardened steel rail with a lightly oiled lubricating layer (ISO-VG 68). The use of other lubricants or rail coatings can influence the coefficient of friction. The operating instructions must be observed before commissioning. We reserve the right to make technical changes in the course of further development. The latest and further data can be found online and in the operating instructions at www.zimmer-group.com.