CLAMPING ELEMENTS | PNEUMATIC
MK2502R + PMK25-6

▶ PRODUCT ADVANTAGES

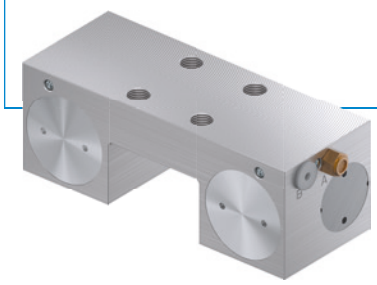

- **broad range of products**

  For all common profile rail guides
- **Energize to close (NO)**

  Closing with pressure
- **high durability**

  Up to 5 million static clamping cycles

▶ TECHNICAL DETAILS

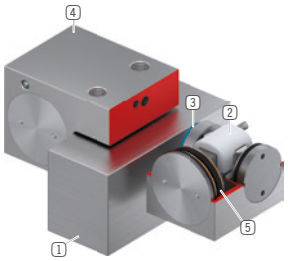

1 **Profile rail guide**
- Available for all common profile rail guides

2 **Wedge-type gear**
- Power transmission between piston and clamping jaw

3 **Clamping jaw**
- Pressed at the free surfaces of the profile rail guide

4 **Housing**

5 **Pneumatic piston**
- The piston moves the wedge-type gear longitudinally

▶ INFORMATION ON THE PRODUCTS

APPLICATION SCE-NARIOS

- **Positioning of axes**
- **Fixing of vertical axes**
- **Positioning of lifting units**

FURTHER INFORMATION

- **Spacer plate**

  In addition, a spacer plate might have to be ordered as height compensation, depending on the height of the rail carriage (dimension D).
- **Special variants on request, e.g.**

  With proximity switch monitoring

  With additional air connection (from above, from the front)

  made of stainless steel

Track manufacturer	Rail type	Rail size	Carriage type
INA	**TSX-E(RUE)**	**25**	**RWU..-E-H**

▶ TECHNICAL DRAWINGS

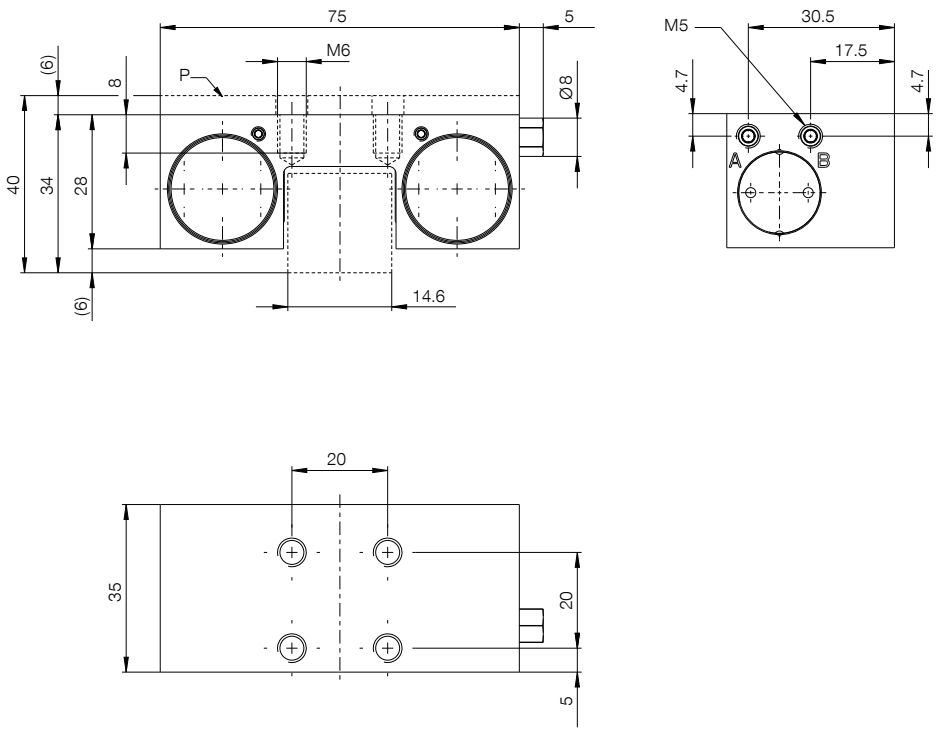

Ⓐ Vent filter (one-sided)

Ⓑ Connection closing (both sides possible, only one connection necessary)

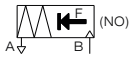

▶ TECHNICAL DATA

Order No.	MK2502R + PMK25-6
Operation	pneumatic
Holding force	1200 [N]
Theoretical holding force (μ=0,1)	1,500 [N]
PLUS connection possible	No
Operating pressure	2 ... 6.5 [bar]
Nominal operating pressure	6 [bar]
B10d value	5,000,000
Positioning accuracy +/-	0,02 [mm]
Opening time	0.025 [s]
Closing time	0.01 [s]
Operating temperature	-10 ... +70 [°C]
Weight	0.34 [kg]
Function	Clamping
Condition	NO (Normally Open) open without pressure
Installation direction	from the front
Masking tape can be used	with masking tape
Air volume per cycle	9 [cm³]
Clean room applications according to DIN EN ISO 14644-1	6

Schematic drawing. General tolerances according to DIN ISO 2768 T1-f/T2-H. Edges according to ISO 13715. Element has no guiding properties. Guidance must be external. The holding force is the maximum force that can be applied in the axial direction. Each clamping and braking element is tested in a 100% inspection before delivery for the specified holding forces on a hardened steel rail with a lightly oiled lubricating layer (ISO-VG 68). The use of other lubricants or rail coatings can influence the coefficient of friction. The operating instructions must be observed before commissioning. We reserve the right to make technical changes in the course of further development. The latest and further data can be found online and in the operating instructions at www.zimmer-group.com.