CLAMPING ELEMENTS | PNEUMATIC
MKS3501A-LP + PMK35-11

▶ PRODUCT ADVANTAGES

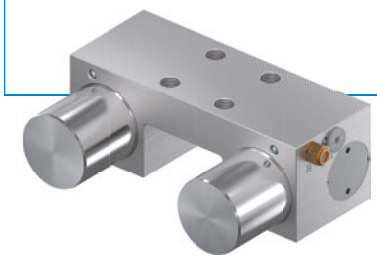

- **broad range of products**
  For all common profile rail guides
- **Energize to open (NC)**
  through spring-loaded energy storage
- **high durability**
  5 million static clamping cycles
- **Higher holding force**
  Via activation with PLUS air
- **Safety element**
  Safe clamping in case of energy failure

▶ TECHNICAL DETAILS

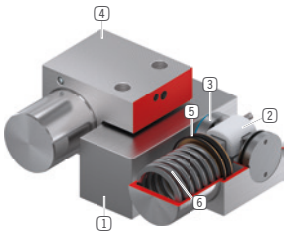

1 **Profile rail guide**
- Available for all common profile rail guides

2 **Wedge-type gear**
- Power transmission between piston and clamping jaw

3 **Clamping jaw**
- Pressed at the free surfaces of the profile rail guide

4 **Housing**

5 **Pneumatic piston**
- The piston moves the wedge-type gear longitudinally

6 **Spring-loaded energy storage**
- For non-pressurized closing of the clamping unit

▶ INFORMATION ON THE PRODUCTS

APPLICATION SCENARIOS

- **Clamping in case of pressure drop**
- **Clamping without energy requirement**

FURTHER INFORMATION

- **Spacer plate**
  In addition, a spacer plate might have to be ordered as height compensation, depending on the height of the rail carriage (dimension D).
- **Special variants on request, e.g.**
  With low opening pressure (3.0 bar)
  With proximity switch monitoring
  With additional air connection (from above, from the front)
  made of stainless steel

Track manufacturer	Rail type	Rail size	Carriage type
THK	**SNS**	**35**	**SNS..RH**

▶ TECHNICAL DRAWINGS

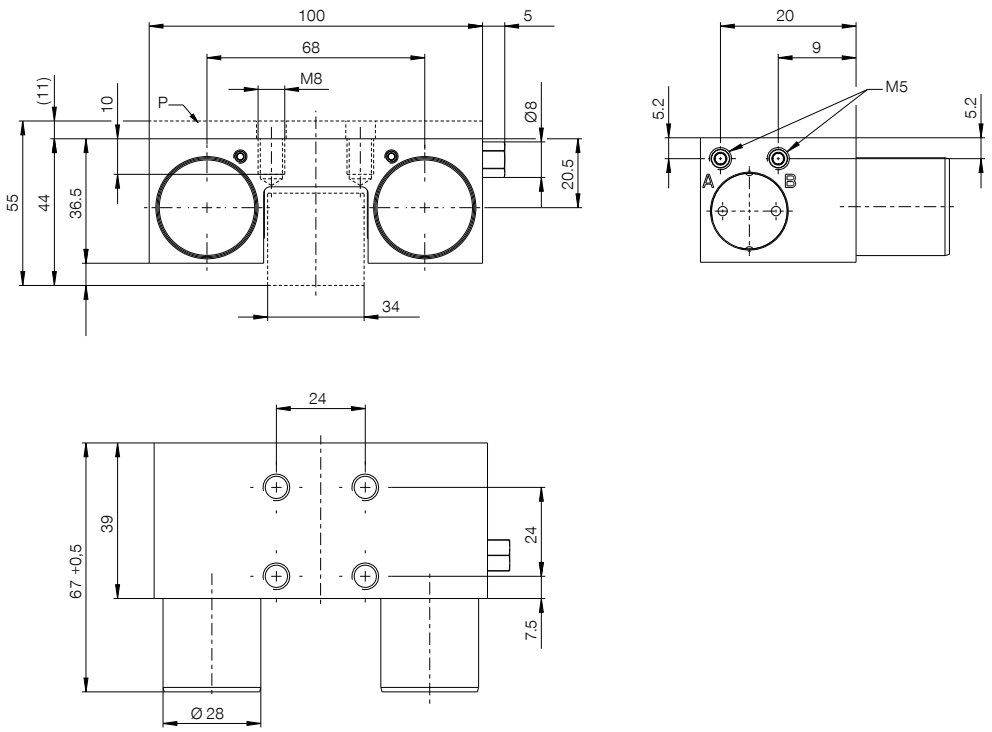

Ⓐ Connection opening (both sides possible, only one connection necessary)

Ⓑ Vent filter (one-sided) Connection can be used as PLUS-connection (both sides possible, only one connection necessary)

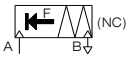

▶ TECHNICAL DATA

Order No.	MKS3501A-LP + PMK35-11
Operation	pneumatic
Holding force	1100 [N]
Theoretical holding force (μ=0,1)	1,375 [N]
PLUS connection possible	Yes
Holding force PLUS connection	1900 [N]
Operating pressure	4 ... 6.5 [bar]
Nominal operating pressure	4 [bar]
B10d value	5,000,000
Positioning accuracy +/-	0,02 [mm]
Opening time	0.02 [s]
Closing time	0.03 [s]
Operating temperature	-10 ... +70 [°C]
Weight	0.79 [kg]
Function	Clamping
Condition	NC (Normally Closed) closed without pressure
Installation direction	from above
Masking tape can be used	without masking tape
Air volume per cycle	12 [cm³]

Schematic drawing. General tolerances according to DIN ISO 2768 T1-f/T2-H. Edges according to ISO 13715. Element has no guiding properties. Guidance must be external. The holding force is the maximum force that can be applied in the axial direction. Each clamping and braking element is tested in a 100% inspection before delivery for the specified holding forces on a hardened steel rail with a lightly oiled lubricating layer (ISO-VG 68). The use of other lubricants or rail coatings can influence the coefficient of friction. The operating instructions must be observed before commissioning. We reserve the right to make technical changes in the course of further development. The latest and further data can be found online and in the operating instructions at www.zimmer-group.com.